REVISIONS				
ECN NO.	REV.	DESCRIPTION	DRAFTER DATE	APPD DATE
	A	CREATED DRAWING		

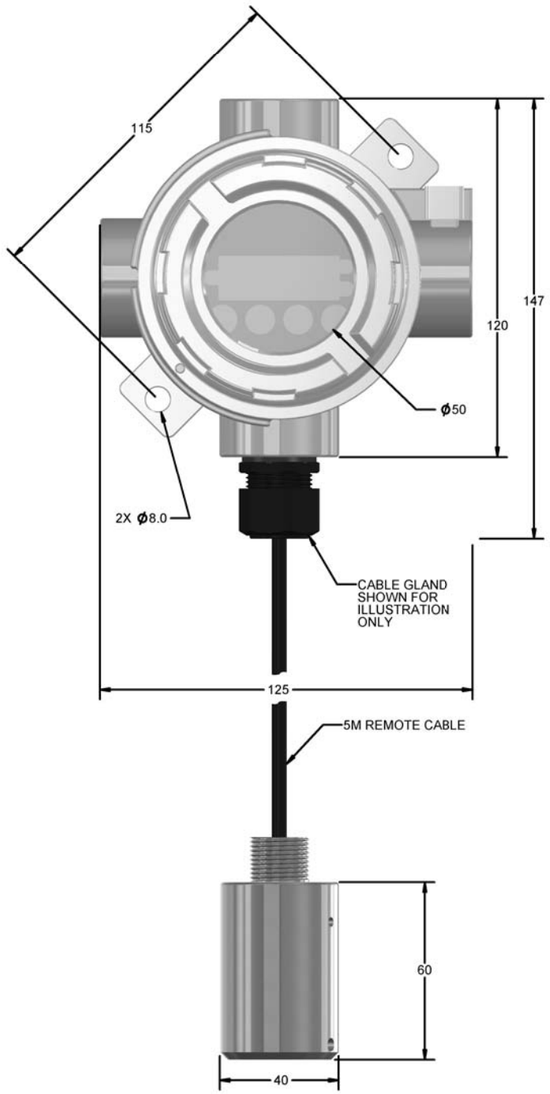

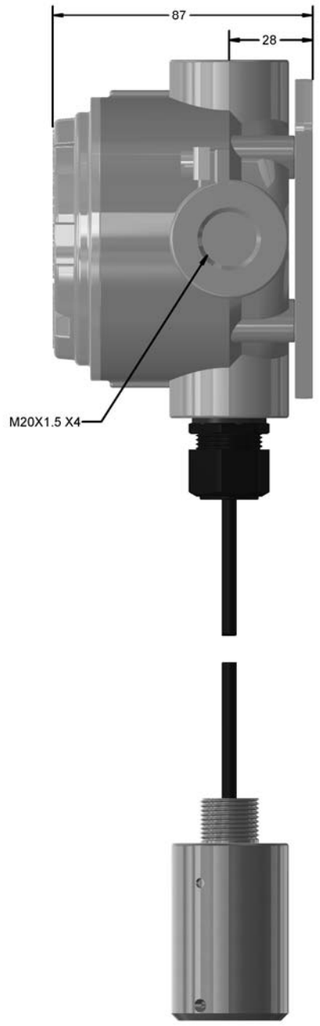

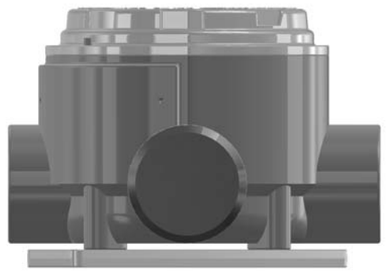

MGS-550 XP REMOTE SENSOR

MGS-550 XP LOCAL SENSOR

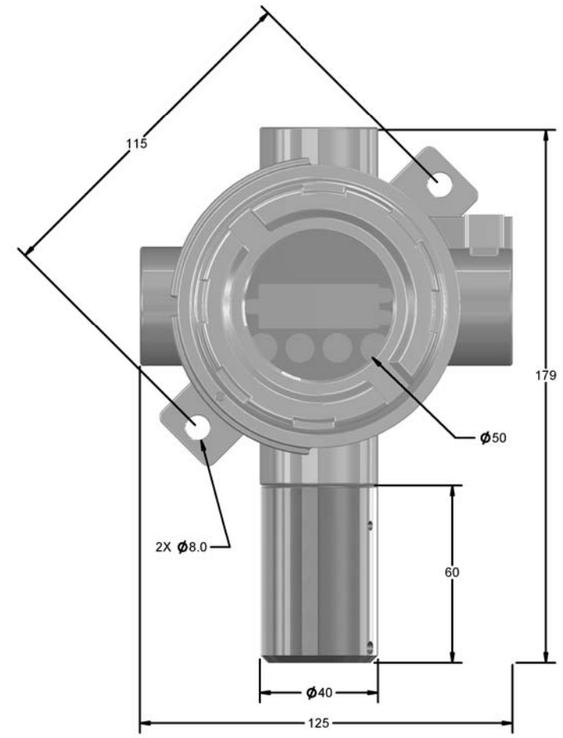

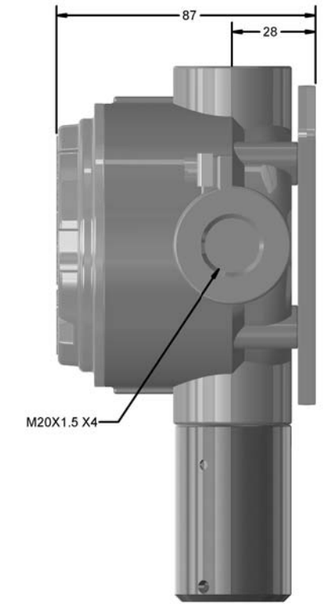

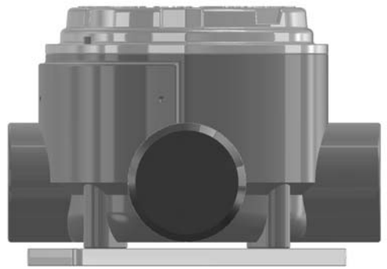

P	METRIC	TOLERANCE UNLESS OTHERWISE SPECIFIED			HOLES		DO NOT SCALE DRAWING ALL DIMENSIONS ARE MILLIMETERS	BACHARACH®
		NO DEC.	1 PL. DEC.	2 PL. DEC.				TITLE d
		±0.5mm	±0.25mm	±0.10mm				
					0 THRU 5mm	-0.0/ +0.07		
					5mm THRU 7mm	-0.0/ +0.1mm	DFTR: a 1/2/2003	
					7mm THRU 12mm	-0.0/ +0.2mm		
		ANGLES	±.5°		OVER 12mm	-0.0/ +0.4mm	CHKD: b 9/5/2006	DRAWING NUMBER e
THIRD ANGLE PROJECTION		MACHINED SURFACES REMOVE ALL BURRS AND SHARP EDGES. 250			MATERIAL:		APPD: c 7/8/2009	SIZE D REV. f
					FINISH:		SCALE: 1:0.2	SHEET 1 OF 1

THE FOLLOWING INFORMATION IS:
■ APPLICABLE ◘ NOT APPLICABLE

THIS DOCUMENT IS THE PROPERTY OF BACHARACH INC. AND IS DELIVERED ON THE EXPRESS CONDITION THAT IT IS NOT TO BE DISCLOSED, REPRODUCED IN WHOLE OR IN PART, OR USED FOR MANUFACTURE FOR ANYONE OTHER THAN BACHARACH INC. WITHOUT ITS WRITTEN CONSENT, AND THAT NO RIGHT IS GRANTED TO DISCLOSE OR SO USE ANY INFORMATION CONTAINED IN SAID DOCUMENT. THIS RESTRICTION DOES NOT LIMIT THE RIGHT TO USE INFORMATION OBTAINED FROM ANOTHER SOURCE.

THIS PRINT IS THE PROPERTY OF Bacharach Inc. NEW KENSINGTON, PA AND MUST BE RETURNED AFTER IT HAS SERVED ITS PURPOSE